Pneumatic Cable Tie Tool: Spare Parts Diagram
Part No. 12500-0

AVERY DENNISON
Fastener Division

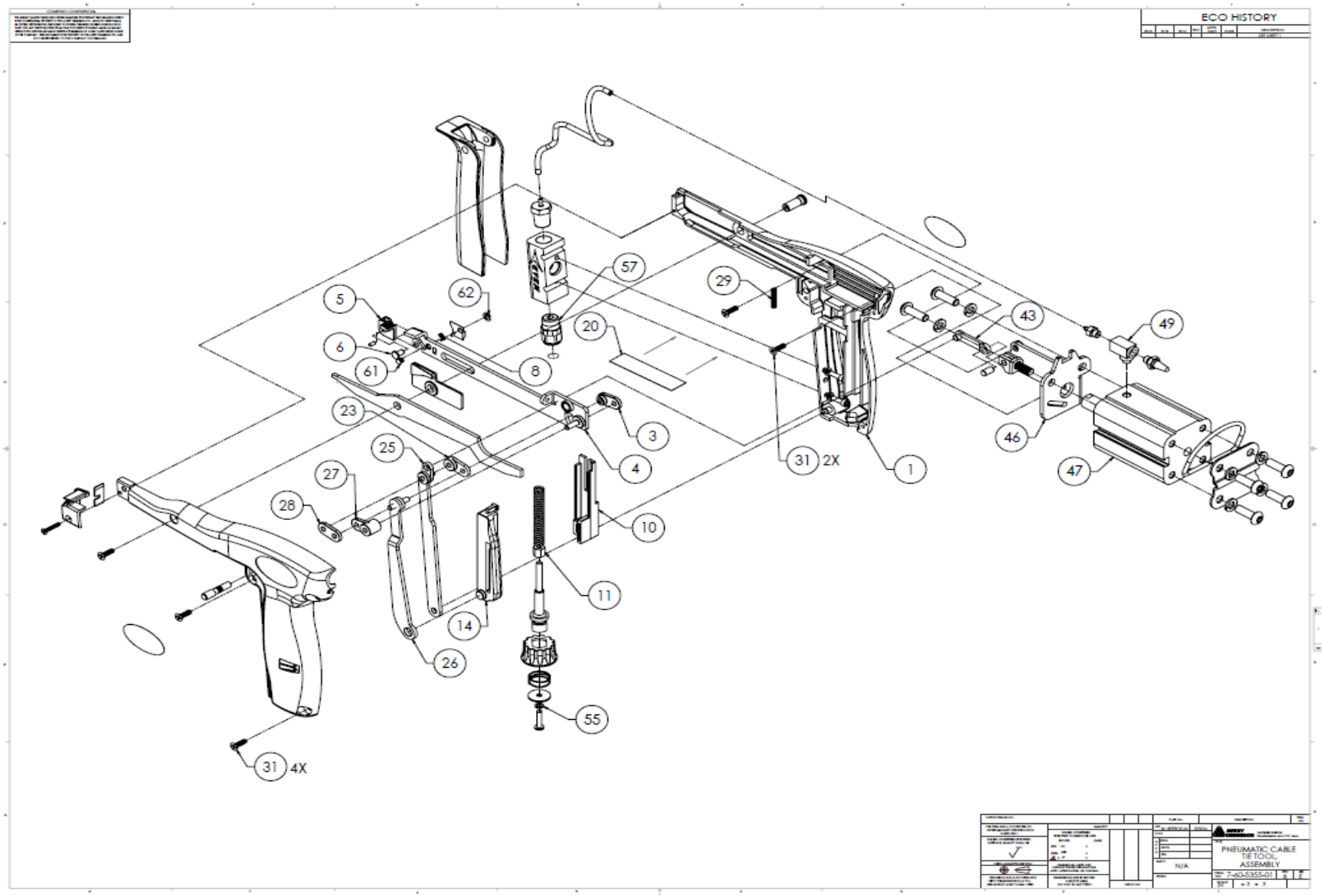

Updated 3/2015

12500-0 Pneumatic Cable Tie Tool: Spare Parts List

ITEM	PART NUMBER	DESCRIPTION	QUANTITY PER TOOL	PRICE
1	3-01-0240-02	HANDLE KIT PNUEMATIC (RIGHT AND LEFT) *12500*	1	
3	7-60-0027-01	TOGGLE LINK #1	1	
4	3-01-0237-01	TENSION LEVER ASSEMBLY	1	
5	3-01-0231-01	PAWL, CA.TIE TOOL	1	
6	3-01-0226-01	PAWL PIVOT PIN	1	
8	7-62-0214-01	PAWL SPRING	1	
10	7-60-5367-01	SPRING HOUSING REWORK PNEUMATIC TOOL	1	
11	7-60-0010-01	ADJUSTING NUT	1	
14	7-60-5305-01	TENSION LINK	1	
20	7-60-8423-01	WEAR PLATE	1	
23	7-60-0025-01	TOGGLE LINK #2	1	
25	7-60-5323-01	PULL-BACK LEVER ASSEMBLY PNEUMATIC TOOL	1	
26	7-60-5300-01	CUT-OFF LINK ASSEMBLY	1	
27	7-60-0029-01	TOGGLE LINK #3	1	
28	7-60-0040-01	TOGGLE LINK #4	1	
29	0-051-166-12	SPRING	1	
31	7-62-0206-01	#4-40 x 3/8” FLAT HEAD SCREW	4	
43	7-60-5325-01	CONNECTING LINK PNEUMATIC TOOL	1	
46	7-62-0291-01	E-RING, EW-2.5	1	
47	7-60-5243-01	AIR CYLINDER AIRTAC	1	
49	7-62-0256-01	CLIPPARD MEV-2 QUICK EXHAUST VALVE	1	
55	0-061-211-03	WASHWER LOCK #4	3	
57	0-021-289-08	FITTING PNEUMATIC TUBE - MLE NPT	1	
61	7-62-0290-01	SPRING RETAINER PIN	1	
62	7-62-0291-01	E-RING EW-2.5	1	
	12002	BLADE REPLACEMENT KIT		
	12501	TRIGGER REPLACEMENT KIT		
	12004	BLADE COVER REPLACEMENT KIT		
	12005	BLADE COVER EXTENSION KIT		
	12006	TENSION KNOB ADJ. LOCK KIT		
	12007	TENSION KNOB REPLACEMENT KIT		

Updated 3/2015