AVERY DENNISON MARKETING SPECIFICATION

THE SUBJECT MATTER DISCLOSED HEREIN EMBODIES PROPRIETARY INFORMATION WHICH IS THE CONFIDENTIAL PROPERTY OF THE AVERY DENNISON CO. NONE OF WHICH SHALL BE COPIED, REPRODUCED, DISCLOSED TO OTHERS, PUBLISHED OR USED IN WHOLE OR IN PART, FOR ANY PURPOSE OTHER THAN THAT FOR WHICH IT IS BEING MADE AVAILABLE WITHOUT THE EXPRESS ADVANCE WRITTEN PERMISSION OF A DULY AUTHORIZED AGENT OF THE COMPANY. THIS DOCUMENT IS THE PROPERTY OF THE AVERY DENNISON CO. AND IS TO BE RETURNED TO THE COMPANY ON DEMAND.

HISTORY

REV.	DATE	DESCRIPTION
J	3.10.15	ADDED MIN INSTALL TEMP; UL LOGO AND 5000 PER CASE CHG LOOP TENSILE TO NEWTONS

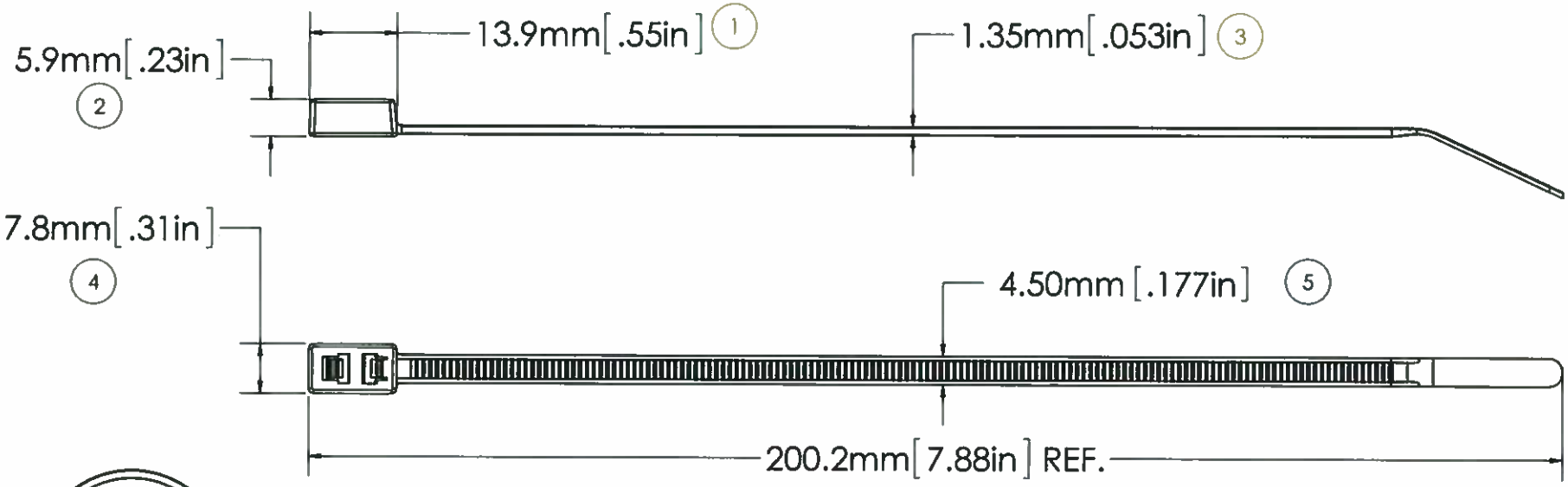

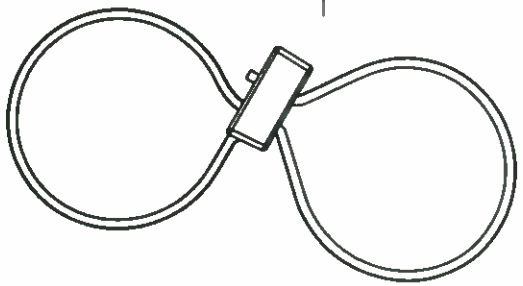

ASSEMBLED VIEW

c UL us
LISTED
POSITIONING DEVICE
E57800
TYPE 21

LOOP TENSILE STRENGTH:	50 LBF / 220N MIN. PER AS-23190
OPERATING TEMP RANGE:	-40°F (-40°C) TO 176°F (80°C)
MIN. INSTALLATION TEMP.:	32°F(0°C)
WEIGHT:	0.04864 OZ./1.43 GRAMS
BUNDLE DIAMETER:	.063" MIN TO: ONE LOOP UP TO Ø1.5" OR TWO LOOPS UP TO Ø0.75" EACH
TOOL:	12001 - HAND INSTALLATION TOOL 12500 - PNEUM. INSTALLATION TOOL
TOOL TENSION SETTING:	6 - 8
PACKAGING:	1000/BAG 5000/CASE

NOTE: THESE CABLE TIES ARE UV RESISTANT AND HAVE A FLAMMABLITY RATING OF V-2

APPROVALS:
ENG. APPR. 3-13-15
Q.A. APPR. 3-13-15

SPECIFIED TOLERANCES ARE:
.XX ± .03 IN. .X ± .7 MM
.XXX ± .01 IN. .XX ± .25 MM
ANGULAR: ± 2°

MATERIAL: **NYLON 6/6**
COLOR: **BLACK, WEATHER RESISTANT**

AVERY DENNISON
FASTENER DIVISION
FITCHBURG, MA 01420 U.S.A.
TEL. 1-800-225-5913
FAX. 978-353-8157

DESCRIPTION: **7.5" CABLE TIE, STD, DOUBLE HEADED**
STOCK NO. **10426-0**
REV. **J**

5 4 3 2 1