AVERY DENNISON MARKETING SPECIFICATION

THE SUBJECT MATTER DISCLOSED HEREIN EMBODIES PROPRIETARY INFORMATION WHICH IS THE CONFIDENTIAL PROPERTY OF THE AVERY DENNISON CO. NONE OF WHICH SHALL BE COPIED, REPRODUCED, DISCLOSED TO OTHERS, PUBLISHED OR USED IN WHOLE OR IN PART, FOR ANY PURPOSE OTHER THAN THAT FOR WHICH IT IS BEING MADE AVAILABLE WITHOUT THE EXPRESS ADVANCE WRITTEN PERMISSION OF A DULY AUTHORIZED AGENT OF THE COMPANY. THIS DOCUMENT IS THE PROPERTY OF THE AVERY DENNISON CO. AND IS TO BE RETURNED TO THE COMPANY ON DEMAND.

HISTORY

REV.	DATE	DESCRIPTION
P	2.25.15	REDRAWN IN NEW FORMAT, ADDED UL INFORMATION AND LOGO

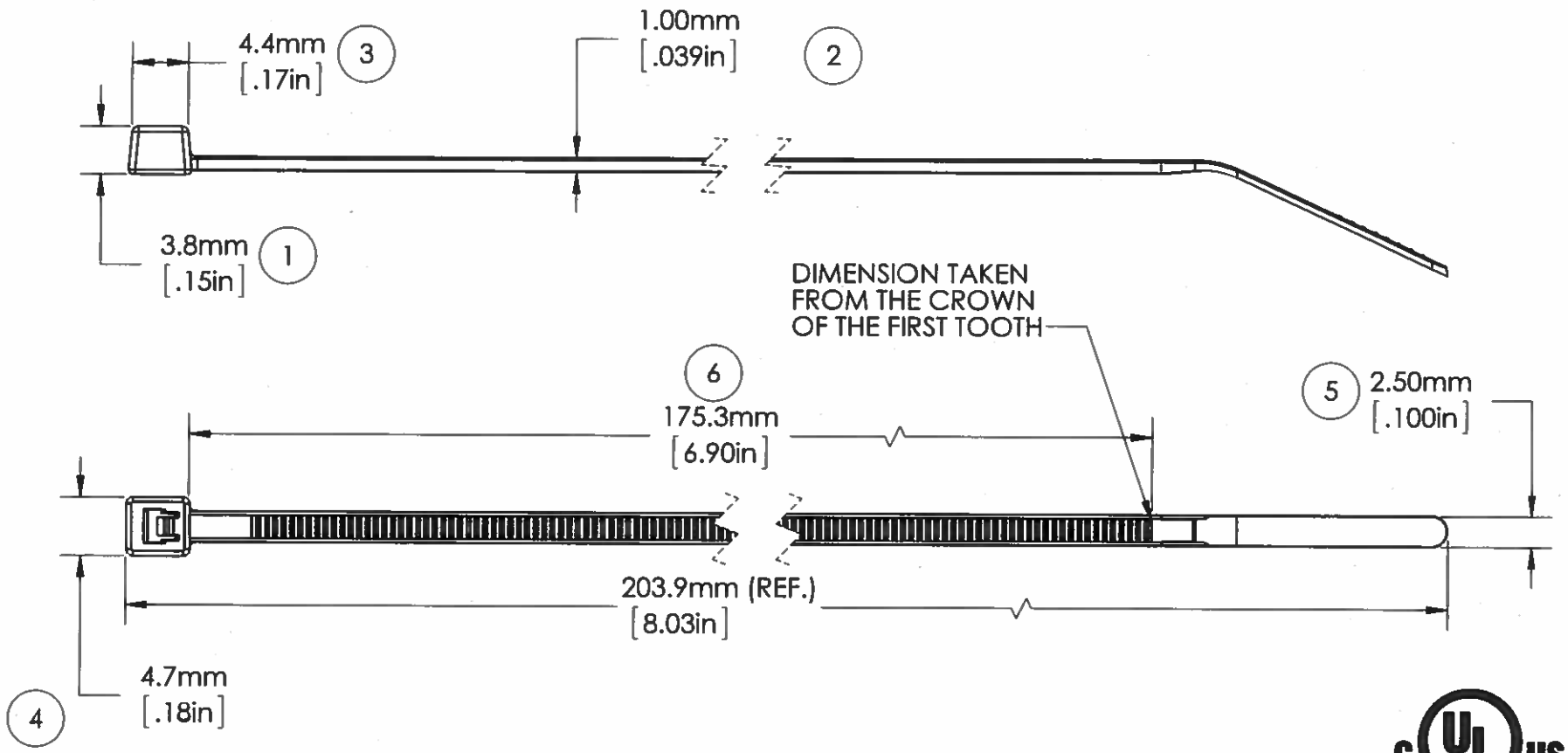

NOTE: THESE CABLE TIES ARE PLENUM RATED AND HAVE A FLAMMABILITY RATING OF V-2

c UL us LISTED
POSITIONING DEVICE
E57800
TYPE 21

LOOP TENSILE STRENGTH:	18 LBF/80 N MIN. PER AS-23190
MILITARY STANDARD:	MS-3367-4-9
OPERATING TEMP RANGE:	-4°F (-20°C) TO 185°F (85°C)
MIN. INSTALLATION TEMP:	32°F (0°C)
WEIGHT:	0.49g. / (0.01672 oz)
BUNDLE DIAMETER:	Ø 1.6mm TO Ø 54mm(0.06" -2.13")
TOOL:	12001-0 - HAND TOOL 12500-0 - PNEUMATIC TOOL
TOOL TENSION SETTING:	1-3
PACKAGING:	100/BAG, 5000/CASE

APPROVALS: ENG. APPR. 2/26/15 Q.A. APPR. 2/26/15

SPECIFIED TOLERANCES ARE:
.XX ± .03 INCHES .X ± .7 MM
.XXX ± .010 INCHES .XX ± .25 MM
ANGULAR: ± 2°

MATERIAL: NYLON 6/6
COLOR: NATURAL

AVERY DENNISON
FASTENER DIVISION
FITCHBURG, MA 01420 U.S.A.
TEL. 1-800-225-5913
FAX. 978-353-8157

DESCRIPTION: 8" CABLE TIE, SLIM-LINE
STOCK NO.: 10328-0
REV.: P

5 4 3 2 1