AVERY DENNISON MARKETING SPECIFICATION

THE SUBJECT MATTER DISCLOSED HEREIN EMBODIES PROPRIETARY INFORMATION WHICH IS THE CONFIDENTIAL PROPERTY OF THE AVERY DENNISON CO. NONE OF WHICH SHALL BE COPIED, REPRODUCED, DISCLOSED TO OTHERS, PUBLISHED OR USED IN WHOLE OR IN PART, FOR ANY PURPOSE OTHER THAN THAT FOR WHICH IT IS BEING MADE AVAILABLE WITHOUT THE EXPRESS ADVANCE WRITTEN PERMISSION OF A DULY AUTHORIZED AGENT OF THE COMPANY. THIS DOCUMENT IS THE PROPERTY OF THE AVERY DENNISON CO. AND IS TO BE RETURNED TO THE COMPANY ON DEMAND.

HISTORY

REV.	DATE	DESCRIPTION
A	2/17/15	RELEASE

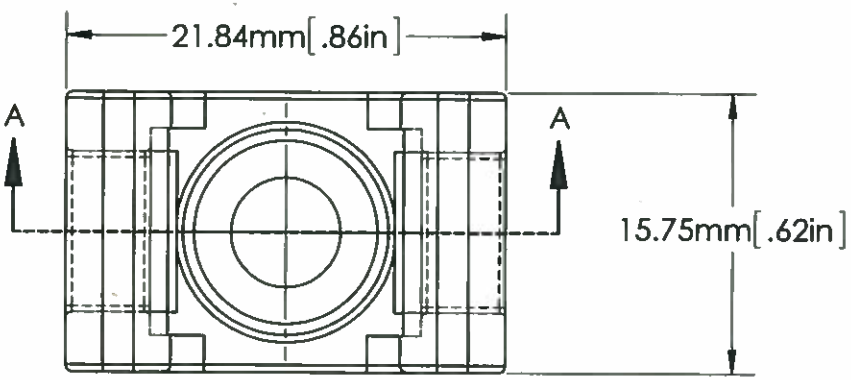

SCALE 4 : 1

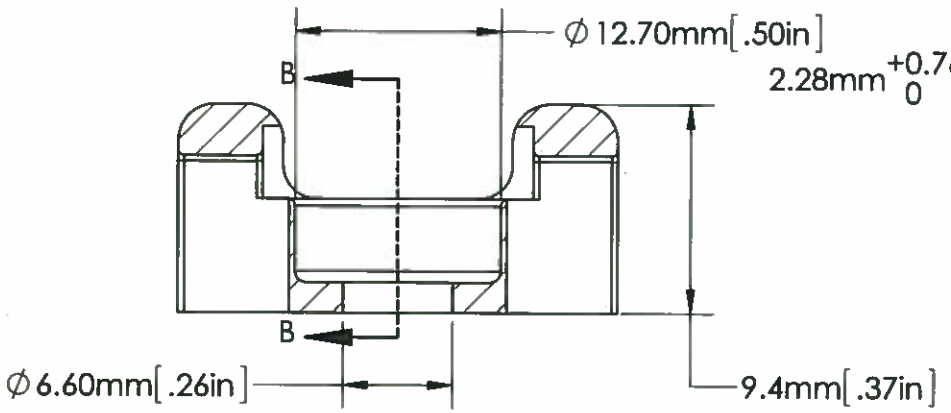

SECTION A-A
SCALE 4 : 1

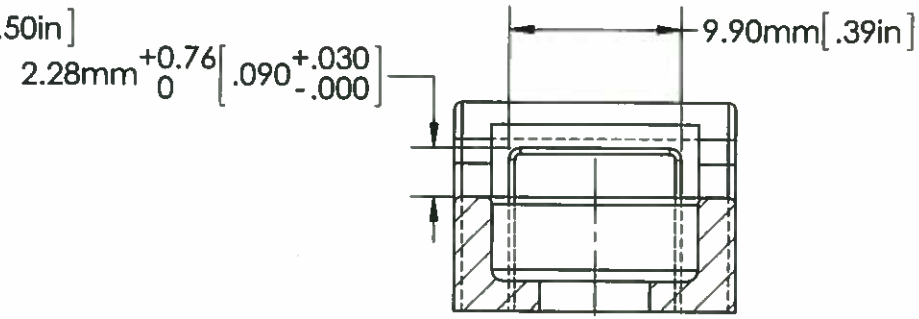

SECTION B-B
SCALE 4 : 1

UL LISTED
POSITIONING DEVICE
3SDW
TYPE 21

APPROVALS: ENG. APPR. 2-17-15 Q.A. APPR. 2-23-15

SPECIFIED TOLERANCES ARE:
.XX ± .03 INCHES .XX ± .25 MM
ANGULAR: ± 2°

WEIGHT:	.071 oz./2.02 grams
MOUNTING:	1/4" (.25) (FLATHEAD SCREW)
PACKAGING:	100/BAG, 5000/CASE

MATERIAL: NYLON 6/6, BLACK HS

COLOR: BLACK

AVERY DENNISON
FASTENER DIVISION
FITCHBURG, MA 01420 U.S.A.
TEL. 1-800-225-5913
FAX. 978-353-8157

DESCRIPTION: CRADLE MOUNT, HEAVY DUTY BLACK, HS

STOCK NO. 10079-2

REV. A

5 4 3 2 1