AVERY DENNISON MARKETING SPECIFICATION

THE SUBJECT MATTER DISCLOSED HEREIN EMBODIES PROPRIETARY INFORMATION WHICH IS THE CONFIDENTIAL PROPERTY OF THE AVERY DENNISON CO. NONE OF WHICH SHALL BE COPIED, REPRODUCED, DISCLOSED TO OTHERS, PUBLISHED OR USED IN WHOLE OR IN PART, FOR ANY PURPOSE OTHER THAN THAT FOR WHICH IT IS BEING MADE AVAILABLE WITHOUT THE EXPRESS ADVANCE WRITTEN PERMISSION OF A DULY AUTHORIZED AGENT OF THE COMPANY. THIS DOCUMENT IS THE PROPERTY OF THE AVERY DENNISON CO. AND IS TO BE RETURNED TO THE COMPANY ON DEMAND.

HISTORY

REV.	DATE	DESCRIPTION
Q	09.24.13	UPDATE BALLOON 5;ADDED UNITS
R	09.19.14	ADDED OPER. TEMP, UL LOGO ANDNOTE; CHG DIM 1 TO BE TAKEN FROM THE BOTTOM OF THE HEAD
S	04.17.17	ADDED SPECIAL CHARACTERISTICS; 105.4 WAS DIM 5, CHG TO A REF, ALL BALLOONS AFTER 5 WERE RE-NUMBERED

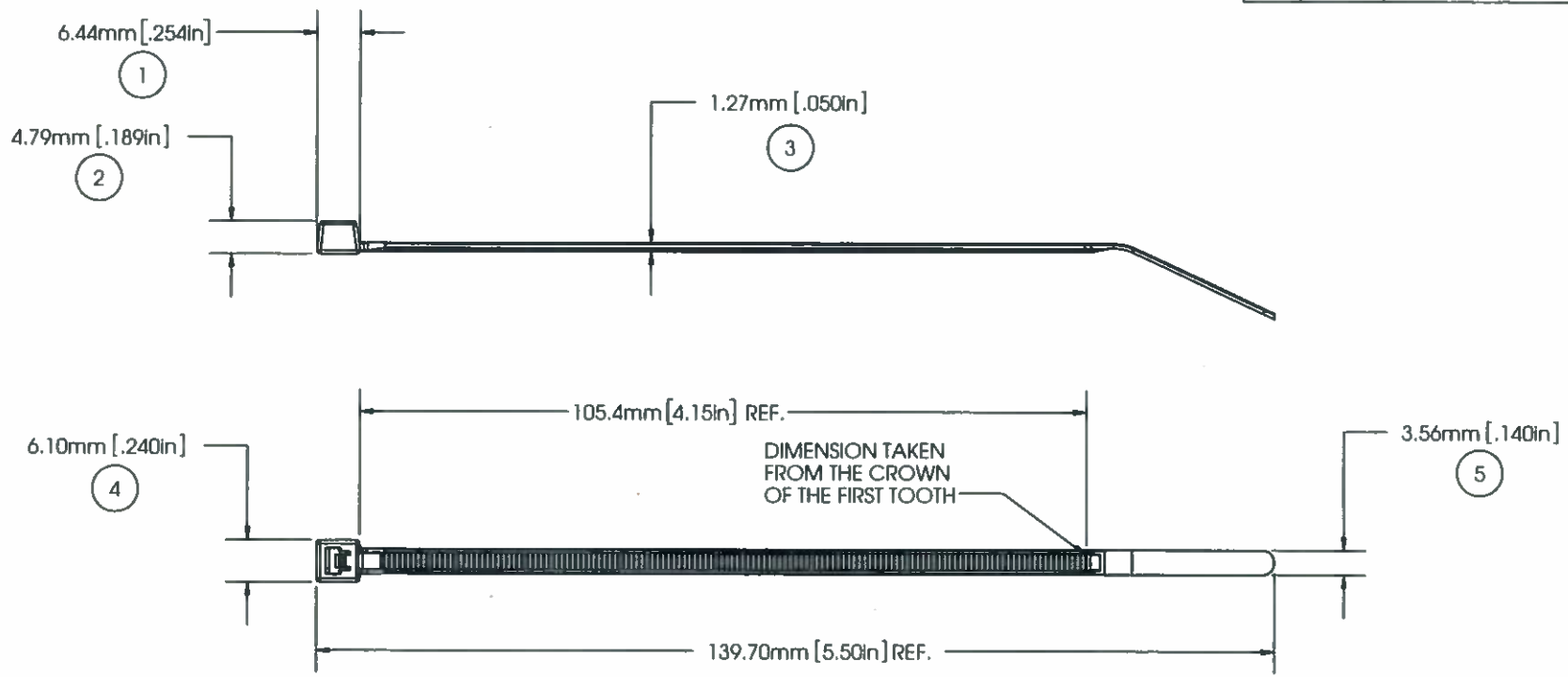

NOTE:
1. SPECIAL CHARACTERISTICS ARE NOTED BY A TRIANGLE (Δ)

6	Δ FLAMMABILITY RATING:	HB RATED PER FMVSS302
7	Δ TENSILE STRENGTH:	40 LBF /180N MIN. PER AS-23190
	MILITARY STANDARD:	MS-3367-5-9
	OPERATING TEMP:	-40°F(-40°C) TO 185°F(85°C)
	MIN. INSTALLATION TEMP:	32°F(0°C)
	WEIGHT:	0.7g/0.03oz.
	BUNDLE DIAMETER:	Ø1.6mm TO Ø31.8mm
	TOOL:	12001 - HAND INSTALLATION TOOL 12500 - PNUEM. INSTALLATION TOOL
	TOOL TENSION SETTING:	3-5
	PACKAGING:	1000/BAG, 5000/CASE

APPROVALS:
ENG. APPR. 4/17/17
Q.A. APPR. 04/17/2017

SPECIFIED TOLERANCES ARE:
.XX ± .03 IN. .X ± .7 mm
.XXX ± .010 IN. .XX ± .25 mm
ANGULAR: ± 2°

AVERY DENNISON
FASTENER DIVISION
FITCHBURG, MA 01420 U.S.A.
TEL. 1-800-225-5913
FAX. 978-353-8157

MATERIAL	DESCRIPTION	
NYLON 6/6	5.5" CABLE TIE, INTERMED.	
COLOR: NATURAL	STOCK NO.: 08376-0	REV.: S

5 4 3 2 1